技术要求：

定子及PCB板信号引出线按GB/T 7345-2008要求：

对定子三相线，每根引出线应能承受18.75N的拉力；

试验后，引出线不能断开，绝缘层和线芯不能损坏。

FUNCTION	COLOR
MOTOR U	BLUE(16AWG)
MOTOR V	BROWN(16AWG)
MOTOR W	PURPLE(16AWG)

Power Wire

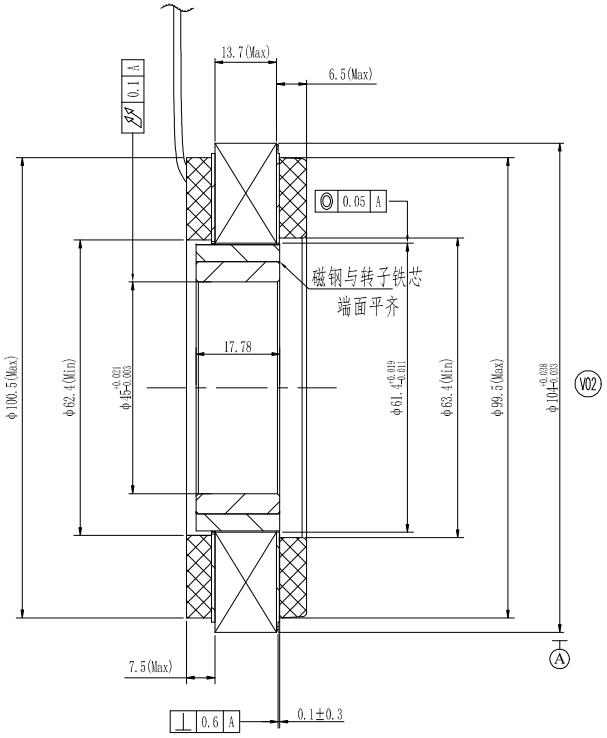

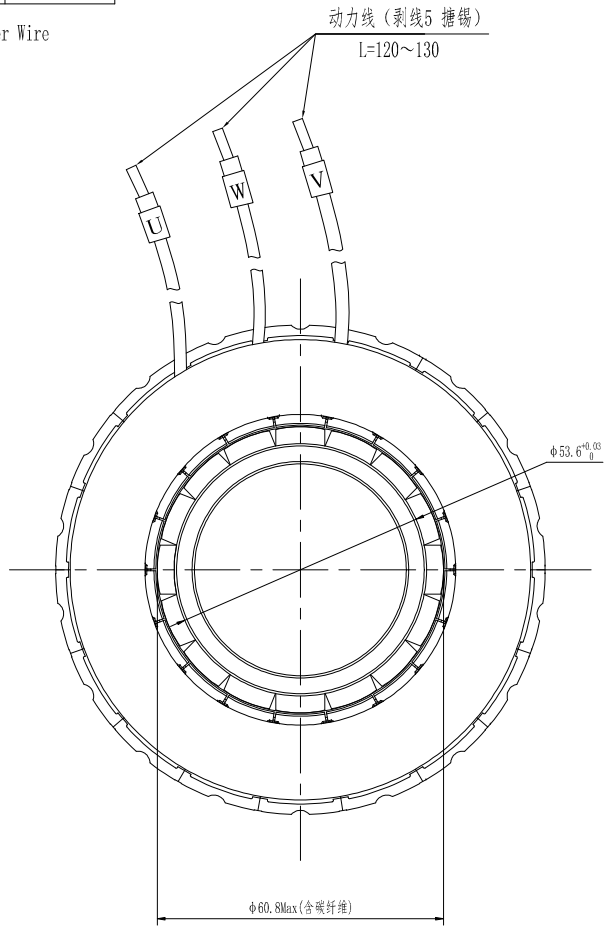

Tecnical Data		
No. of poles		16
DC Link Voltage U_{DC} (DC Link)		48
Rated Power P_N (W)		380
Rated Torque T_N (N.m)		1.5
Rated Speed n_N (rpm)		2420
Rated Current I_N (A)		10.3
Maximum torque T_m (N.m)		4.5
Maximum Current I_m (A)		30.9
Standstill torque T_S (N.m)		2.2
Standstill current I_S (A)		15.1
Resistance line-line R_t (Ω)	±10%	0.117 (at25°)
Inductance line-line L_t (mH)	±20%	0.53
Electrical time constant τ_e (ms)		4.53
Mechanical time constant τ_m (ms)		1.6
Voltage constant K_e (V/krpm)	±5%	9.68
Torque constant K_t (Nm/A)		0.16
Rotor moment of inertia Jm (Kg.cm^2)		2.018
Insulation class		F
Weight(Kg)		0.77
Feed back device		
Temperature Sensor		
Cooling method		Totally enclosed non-ventilated
Evironmental conditions: Temperature		guarantee the measured winding temperature is between -20℃ and 120℃
Evironmental conditions: Humidity		Below 90%RH (No dewing)
Evironmental conditions: Environment		Far away active gas,combustible gas,oil drop,ash.
Evironmental conditions: Installation altitude		UP TO 1000m:rated power, above 1000m:1.5% power decreasing per 100m,max.4000m

VER	DESCRIPTION OF CHANGE
V1.1	更改命名

REV	ECN NO.	DRN	APP'D	DATE
V1.1	KA230123	ZT	SL	23.3.30

UNLESS OTHERWISE SPECIFIED TOLERANCES:
DECIMALS: .x ±0.5 .xx ±0.25 .xxx ±0.1
ANGULAR: ±0°30'
UNIT: mm
DO NOT SCALE DRAWING

MATERIAL

CONTR.

FIRST ANGLE PROJECTION

		DATE
DESIGN	SL	20-08-15
CHECK	PHX	20-08-15
APPD	ZZJ	20-08-15
SCALE		
SHEET	OF	

P/N. 307080356SS

TITLE Outside Drawing

USED ON FMC10414-0038-2445N-8DK00

DWG NO. REV V1.1

KINAVO MOTOR

V1.1