NOTES: (UNLESS OTHERWISE SPECIFIED)

1. ALL DIMENSIONS ARE IN MM OTHERWISE NOTED.
2. ALL DIMENSION APPLY AFTER PLATING.
3. ACTUATOR LINEAR SPECIFICATONS:
   LINEAR STROKE: 25 MM
   PEAK FORCE: 50 KGF @ 3 AMPS
   COIL DC RESISTANCE: 16 OHMS @ 23° C
   MAXIMUM POWER APPLIED: 48 VDC @ 3 AMPS
   LINEAR ENCODER RESOLUTION: 5 MICRON NON-CONTACT
   ESTIMATED MOVING MASS (GRAMS): 1600 GRAMS
   ESTIMATED TOTAL WEIGHT: 26.5 KGRAMS

PLEASE NOTE THIS IS PROPOSAL ONLY. CUSTOMER IS ASKED TO REVIEW AND COMMENT UPON SPECIFICATION AGREEMENT SAMPLE WILL BE PROVIDE.

REVISIONS

REV	DATE	ECN	DESCRIPTION	APP
P1	10/02/02		PRELIMINARY RELEASE	TMV
A	1/19/16	5688	PART NUMBER CHANGE	SB

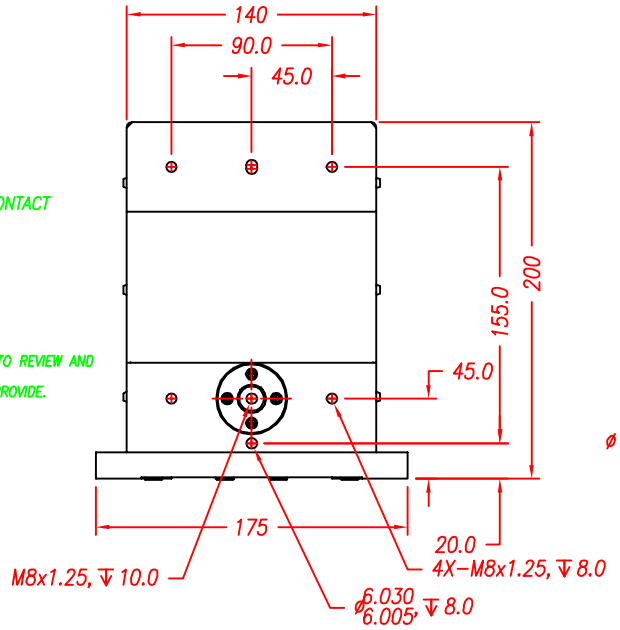

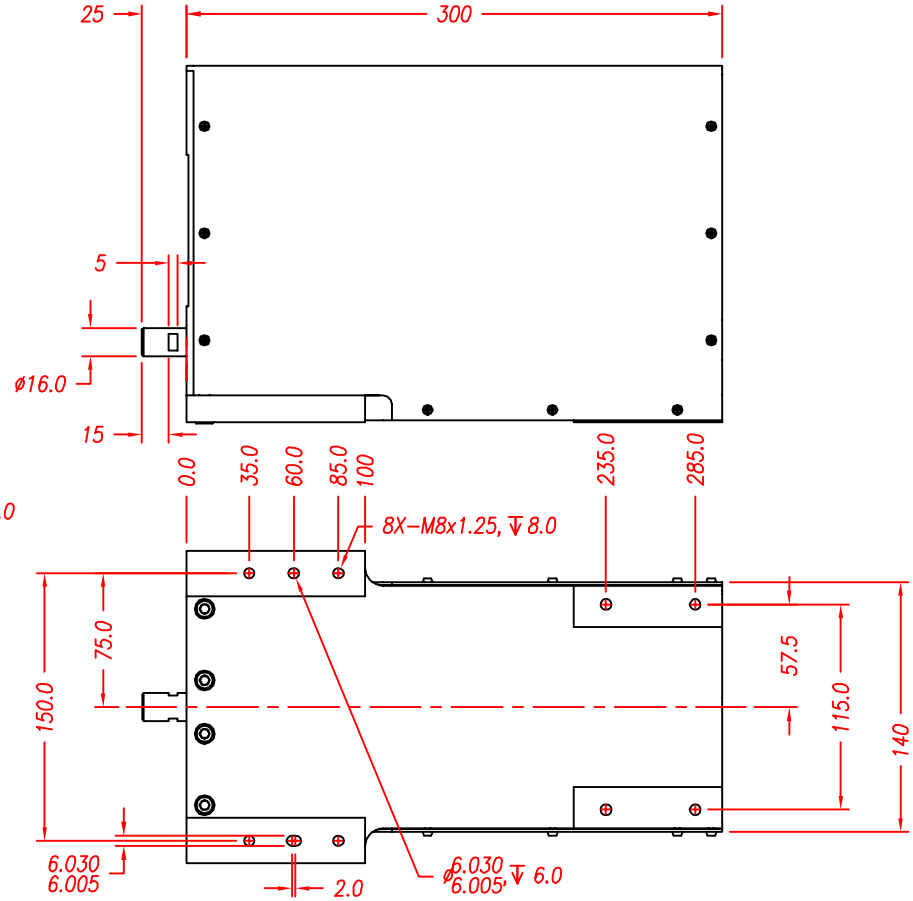

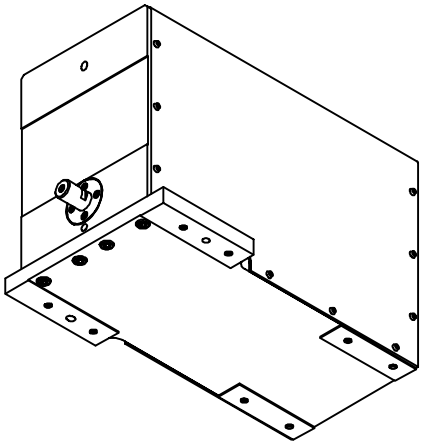

TOLERANCES ARE: X. ± 0.50; X.X ± 0.1; X.XX ± 0.05; X.XXX ±; ANGULARITY ± 0.1°; CONCENTRIC ± 0.01; ROUNDNESS ± 0.05; EDGE BREAK 0.02 MAX; CHAMFER 0.03 MAX	MATERIAL: ALUMINUM	SMAC			REF. NUMBER: LAL500-25-5
	HEAT TREAT: / RC / DEEP	DESIGNED BY: TOAN VU	DATE: 10/02/02	CHECKED BY:	DATE:	CONTRACT: LAL500
		DRAWN BY: TOAN VU	DATE: 10/02/02	APPROVED BY:	DATE:	
	MACHINE FINISH: 1.6 EXCEPT NOTED.	PART NAME: LAL500-25-7X-2				SHEET NUMBER: 1 OF 1
FILE NAME: LAL500-25-53-5	PROTECTIVE FINISH: CLEAR ANODIZE, GLASS BEAD	SCALE: 1:4	DWG SIZE: B	PART NUMBER: LAL500-25-7X-2		REVISION: A
	SPEC. NUMBER:	DO NOT SCALE DWG				